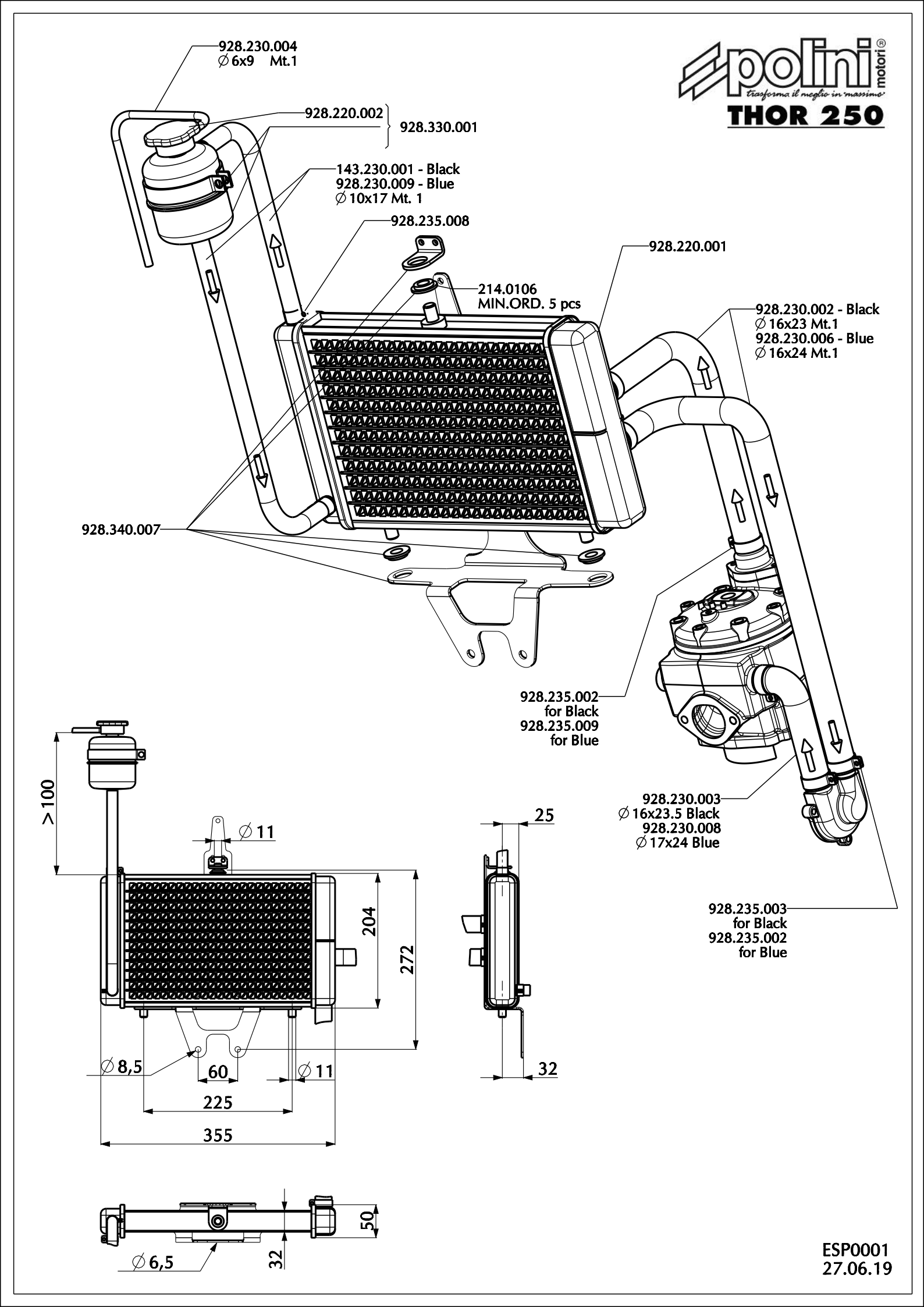
polini motori®
trasforma il meglio in massimo
THOR 250
928.230.004
∅6x9 Mt.1
928.220.002
928.330.001
143.230.001 - Black
928.230.009 - Blue
∅10x17 Mt. 1
928.235.008
928.220.001
214.0106
MIN.ORD. 5 pcs
928.230.002 - Black
∅16x23 Mt.1
928.230.006 - Blue
∅16x24 Mt.1
928.340.007
928.235.002
for Black
928.235.009
for Blue
928.230.003
∅16x23.5 Black
928.230.008
∅17x24 Blue
928.235.003
for Black
928.235.002
for Blue
>100
∅11
204
272
∅8,5
60
∅11
225
355
25
32
50
32
∅6,5
ESP0001
27.06.19